INSTALLATION INSTRUCTIONS

Enerlites® FBOX™

FB-02 Junction Box

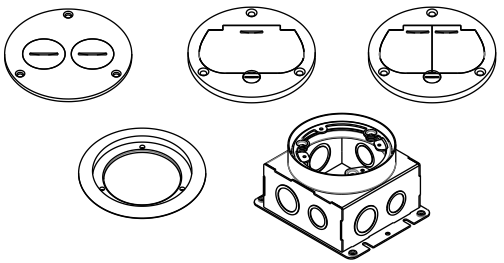

SPECIFICATIONS

Cover & Flange Material.....Brass or Nickel-Plated Brass
Junction Box Material.....Galvanized Metal

DESCRIPTION/ FEATURES

FB-02 is a squared junction box with round opening that allows more room for ease of wiring. It is specially designed for use with the following covers and flanges:

Covers		Flanges	
975501-C	975501-SS	975509-C	975509-S
975502-C	975502-S	975518-C	975518-S
975503-C	975503-S		
975516-C	975516-S		
975517-C	975517-S		
975519-C	975519-S		

DIMENSIONS

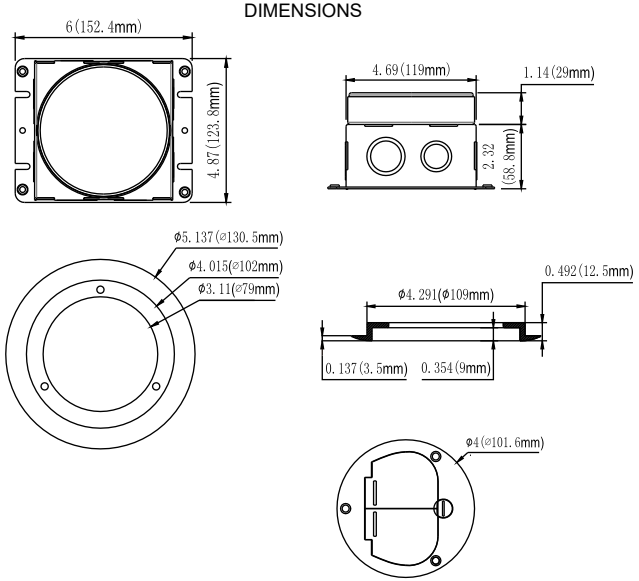

WARNING

Turn the POWER OFF at the circuit breaker before installing the Floor Box

Read and understand these instructions before installing. This device is intended for installation in accordance with the National Electric Code and local regulations. It is recommended that a qualified electrician performs this installation. Make sure to turn off the circuit breaker or fuse(s) and make sure power is off before wiring the device. Use copper wire only.

NOTES:
10-12 AWG Stranded or Solid Copper wire is recommended.

FLOOR BOX INSTALLATION

Before Installation:
Ensure there is sufficient depth & space below the sub floor.

Step 1 -Mount the floor box (FB-02)

1. Remove knockouts and secure the box onto the floor.
2. Pull the wire through the removed knockouts and secured the wires with proper wire clamps or grommets.
3. Connect the wires based on the wiring directions.

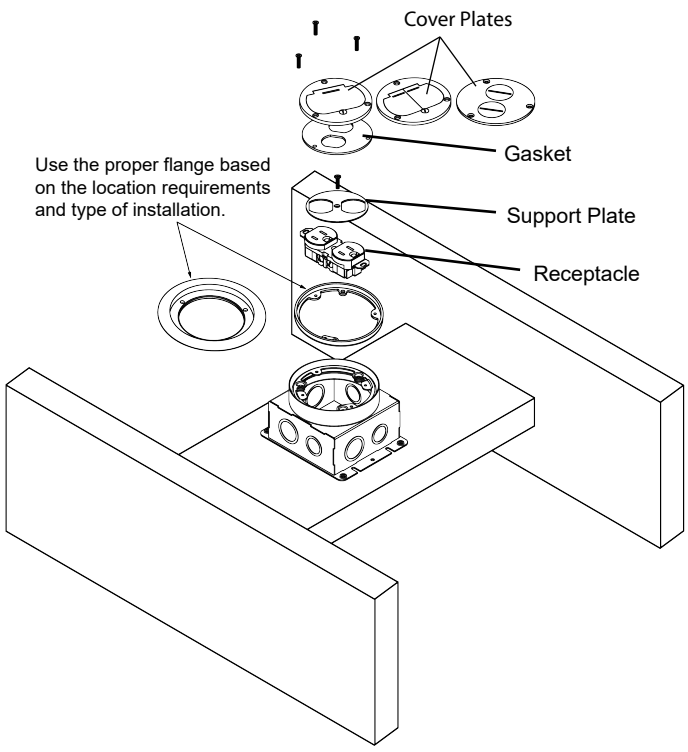

WIRING DIRECTIONS

Step 2 -Connect the wires

1. Connect the HOT wires to the wire terminals with BLACK screws.
2. Connect the NEUTRAL wires to the wire terminals with WHITE (SILVER) screws.
3. Connect the GROUND wire to the wire terminal with the GREEN grounding screw.

NOTE: Use caution if you are using a receptacle not rated or recommended for use with this floor box. Follow the wiring directions provided by the receptacle's manufacturer.

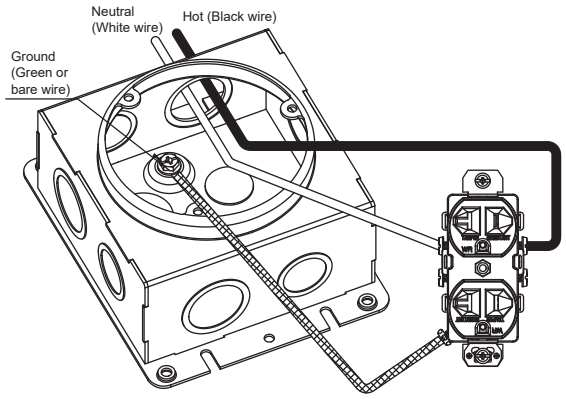

Step 3 -Attach the receptacle and cover plate

1. Attach the receptacle to the flange that's mounted on the floor box.
2. Attach the support plate to the receptacle.
3. Place gasket on top of the support plate.
4. Attach the cover plate to the flange.

WARRANTY INFORMATION

This device is warranted to be free of material and workmanship defects for 2 years from the date of purchase. Original receipt or proof of purchase from an authorized retailer must be presented upon warranty claim. ALL claims must be verified and approved by Enerlites, Inc. Warranties from other Enerlites products may vary. This warranty is nontransferable and does not cover normal wear and tear or any malfunction, failure, or defect resulting from misuse, abuse, neglect, alteration, modification, or improper installation. To the fullest extent permitted by the applicable state law, Enerlites shall not be liable to the purchaser or end user customer of Enerlites products for direct, indirect, incidental, or consequential damages even if Enerlites has been advised of the possibility of such damages. Enerlites' total liability under this or any other warranty, express or implied, is limited to repair, replacement or refund. Repair, replacement or refund are the sole and exclusive remedies for breach of warranty or any other legal theory.

© 2016 Enerlites Inc.
CA, U.S.A.
WWW.ENERLITES.COM
0201170074-01
REV 20230802